Cambridge Assessment International Education

Cambridge International AS & A Level

CANDIDATE NAME	

CENTRE NUMBER						CANDIDATE NUMBER				

6018803933

PHYSICS **9702/33**

Paper 3 Advanced Practical Skills 1 **February/March 2022**

2 hours

You must answer on the question paper.

You will need: The materials and apparatus listed in the confidential instructions

INSTRUCTIONS

- Answer **all** questions.
- Use a black or dark blue pen. You may use an HB pencil for any diagrams or graphs.
- Write your name, centre number and candidate number in the boxes at the top of the page.
- Write your answer to each question in the space provided.
- Do **not** use an erasable pen or correction fluid.
- Do **not** write on any bar codes.
- You will be allowed to work with the apparatus for a maximum of 1 hour for each question.
- You should record all your observations in the spaces provided in the question paper as soon as these observations are made.
- You may use a calculator.
- You should show all your working and use appropriate units.

INFORMATION

- The total mark for this paper is 40.
- The number of marks for each question or part question is shown in brackets [ ].

For Examiner's Use	
1	
2	
Total	

This document has **16** pages. Any blank pages are indicated.

© UCLES 2022

You may not need to use all of the materials provided.

1 In this experiment, you will investigate the density of a liquid.

(a) (i) You have been provided with a U-tube containing coloured water. The U-tube has two sides, **A** and **B**, as shown in Fig. 1.1.

The wooden strip is supported by a stand and clamp (not shown in Fig. 1.1).

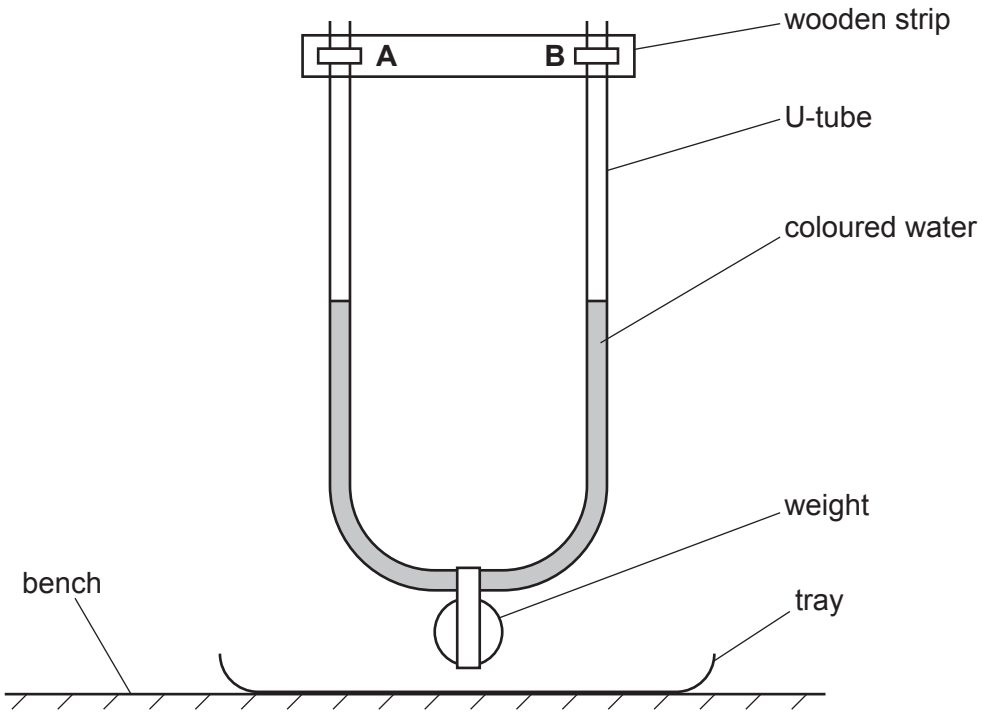

Fig. 1.1

- You are provided with a beaker containing oil.

  Use the pipette to slowly put oil into **A**. Wait to allow the oil to reach the water surface.
  The final length of the oil column above the water in **A** is *F*. Continue adding oil until *F* is approximately 7 cm, as shown in Fig. 1.2.

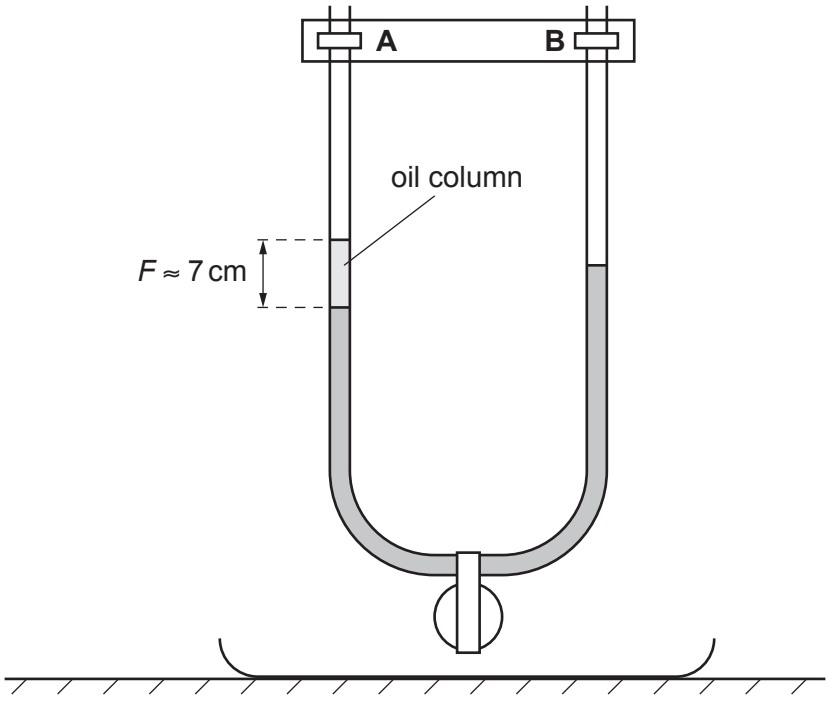

Fig. 1.2

- Measure and record *F*.

F = ... cm [1]

(ii) • Use the pipette to slowly put oil into **B**. Wait to allow the oil to reach the water surface.
The final length of the oil column above the water in **B** is *h*. Continue adding oil until *h* is approximately 3 cm, as shown in Fig. 1.3.

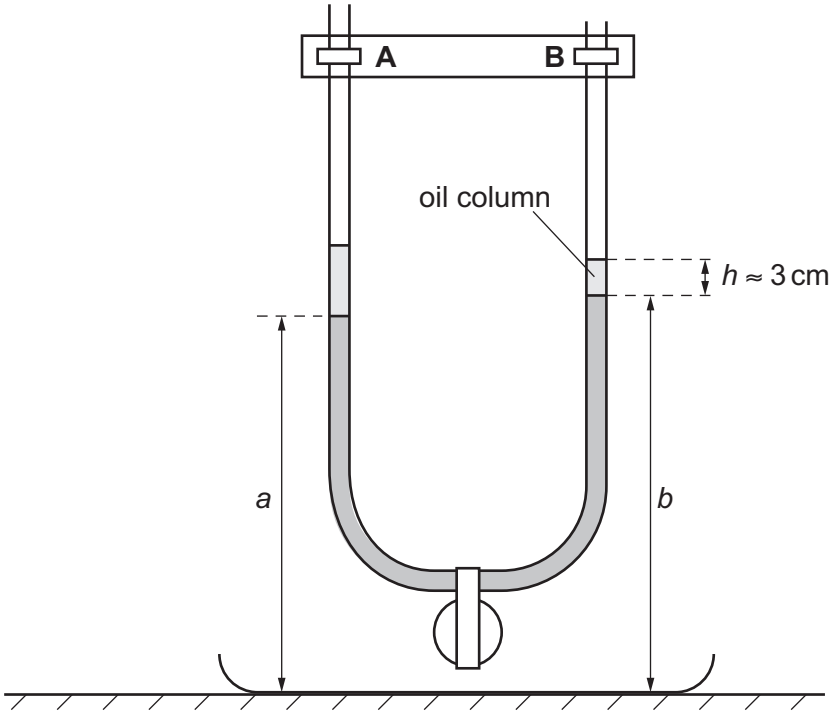

Fig. 1.3

• Measure and record *h*.

h = ... cm

• The height of the water level in **A** is *a*, and the height of the water level in **B** is *b*, as shown in Fig. 1.3.

Measure and record *a* and *b*.

a = ...

b = ...

• Calculate *y* using

$$y = b - a$$

y = ...
[2]

(b) Repeat **(a)(ii)** with increasing amounts of oil **in B** until you have six sets of values of h, a, b and y.

Record your results in a table. Some of your values of y may be negative.

[7]

(c) (i) Plot a graph of y on the y-axis against h on the x-axis. [3]

(ii) Draw the straight line of best fit. [1]

(iii) Determine the gradient and y-intercept of this line.

gradient = ...

y-intercept = ...
[2]

© UCLES 2022

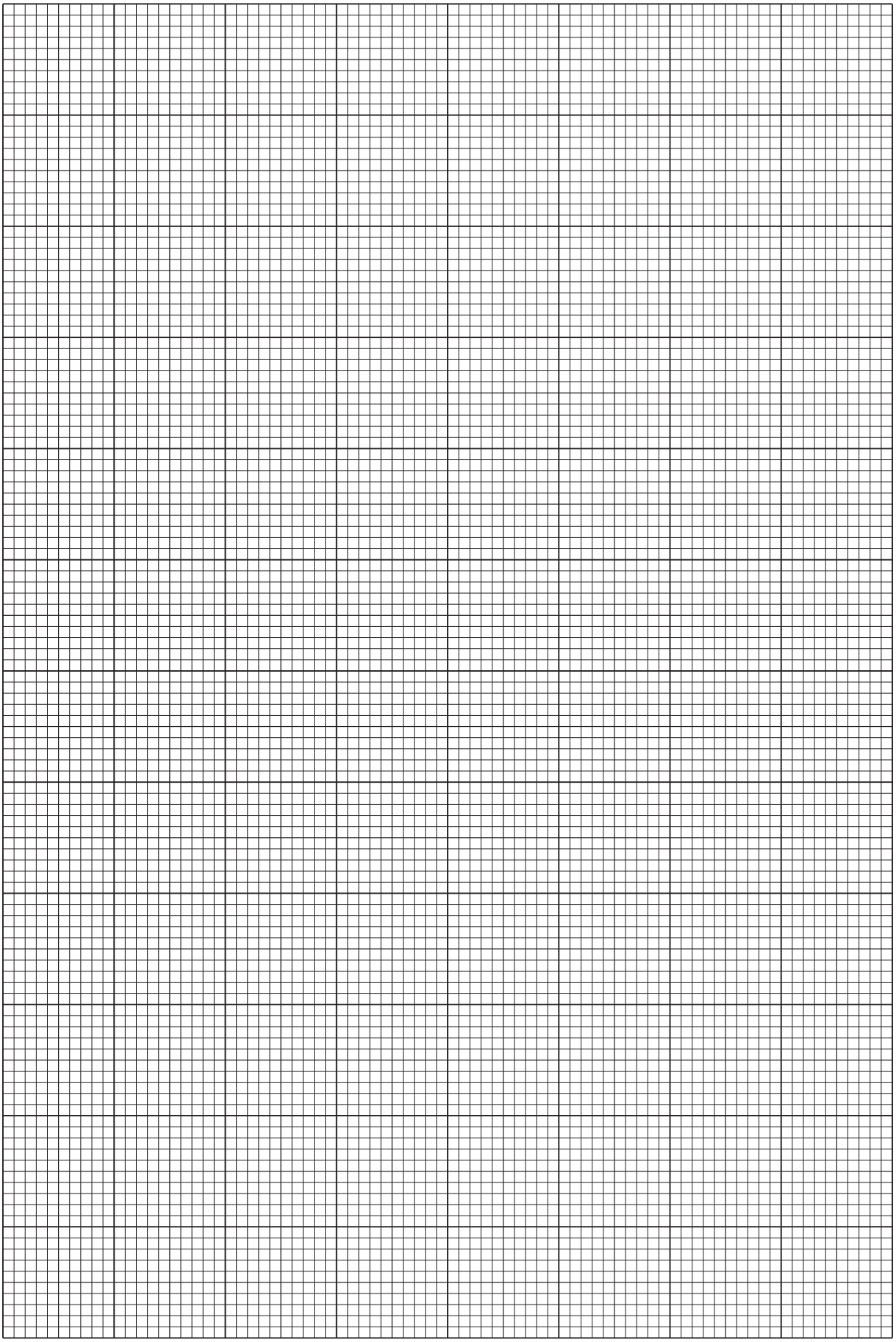

(d) It is suggested that the quantities y and h are related by the equation

$$y = P h + Q$$

where P and Q are constants.

Use your answers in **(c)(iii)** to determine the values of P and Q.
Give appropriate units.

P = ...

Q = ...
[2]

(e) Calculate the density ρ of the oil using the relationship

$$QR = F\rho$$

where R is a constant with value $1.0\,\text{g}\,\text{cm}^{-3}$.

Include an appropriate unit and give your answer to an appropriate number of significant figures.

ρ = ... [2]

[Total: 20]

You may not need to use all of the materials provided.

2 In this experiment, you will investigate the oscillations of a spring system.

(a) (i) • Assemble the apparatus as shown in Fig. 2.1.

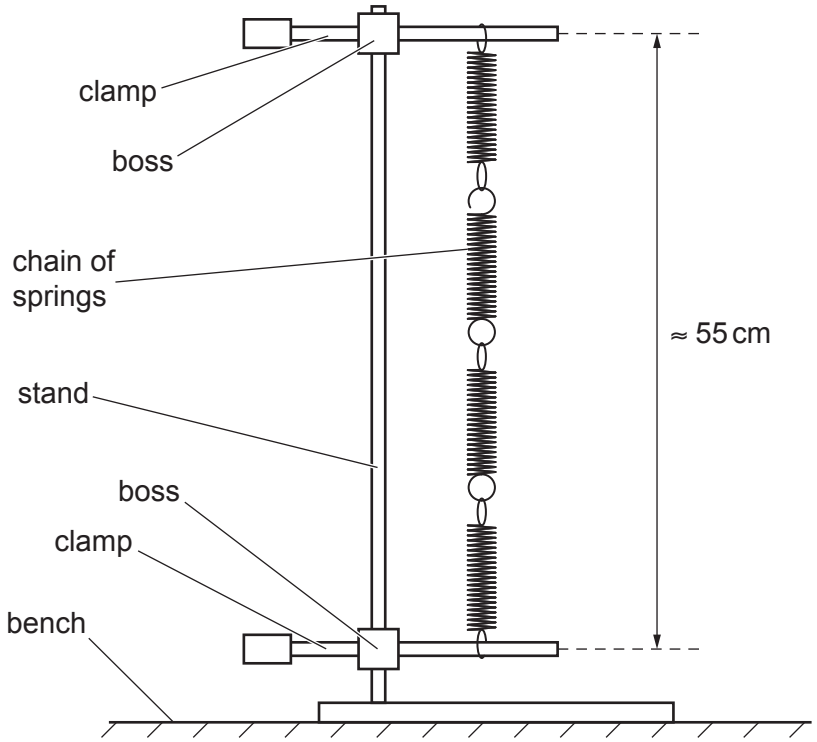

Fig. 2.1

- Adjust the apparatus so that the rods of the clamps are approximately 55 cm apart, as shown.
- Roll the modelling clay into a sphere.
- Measure and record the diameter *d* of the sphere.

d = ... cm [2]

(ii) Estimate the percentage uncertainty in your value of *d*.
Show your working.

percentage uncertainty = ... % [1]

(b) • Cut the sphere in half.

• Reverse the two halves and then press them together firmly around the joint between the first and second springs, as shown in Fig. 2.2.

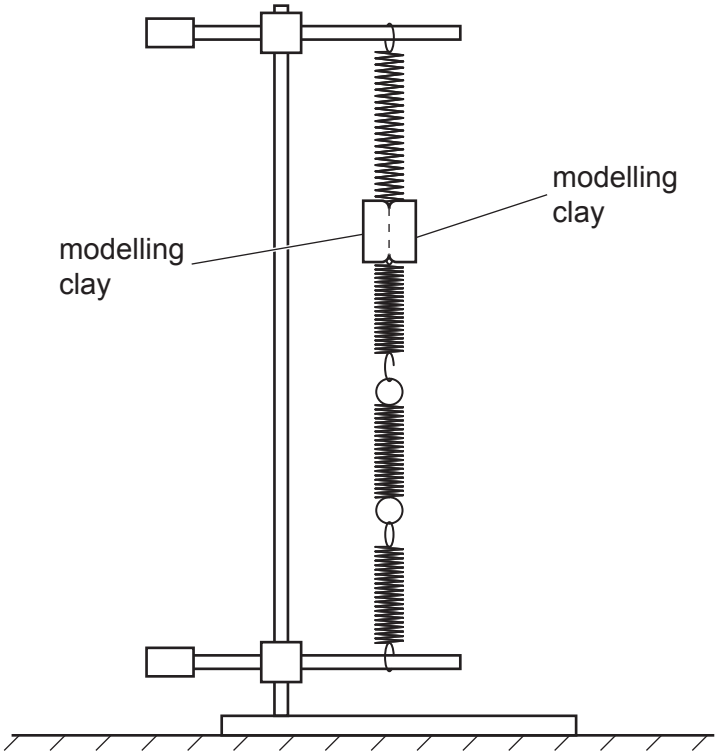

Fig. 2.2

• Record the number n of springs above the modelling clay.

n = ...

• Pull the modelling clay down a short distance and release it so that it oscillates vertically.

• Determine the period T of the oscillations.

T = ...
[3]

© UCLES 2022

(c) • Remove the modelling clay from the springs.

• Cut away a quarter of the clay and roll the remaining modelling clay into a sphere.

• Measure and record d.

d = ... cm

• Repeat **(b)** but this time press the modelling clay around the joint between the second and third springs.

n = ...

T = ...
[3]

(d) It is suggested that the relationship between d, n and T is

$$d^3n\,(4 - n) = kT^2$$

where k is a constant.

(i) Using your data, calculate two values of k.

first value of k = ...

second value of k = ...
[1]

(ii) Justify the number of significant figures you have given for your values of *k*.

.....

.....

..... [1]

(e) It is suggested that the percentage uncertainty in the values of *k* is 20%.
Using this uncertainty, explain whether your results support the relationship in **(d)(i)**.

.....

.....

..... [1]

(f) (i) Describe four sources of uncertainty or limitations of the procedure for this experiment.

For any uncertainties in measurement that you describe, you should state the quantity being measured and the reason for the uncertainty.

1 .....

.....

2 .....

.....

3 .....

.....

4 .....

.....

[4]

(ii) Describe four improvements that could be made to this experiment. You may suggest the use of other apparatus or different procedures.

1 .....

.....

2 .....

.....

3 .....

.....

4 .....

.....

[4]

[Total: 20]

© UCLES 2022

BLANK PAGE

© UCLES 2022

BLANK PAGE

© UCLES 2022

BLANK PAGE

Permission to reproduce items where third-party owned material protected by copyright is included has been sought and cleared where possible. Every reasonable effort has been made by the publisher (UCLES) to trace copyright holders, but if any items requiring clearance have unwittingly been included, the publisher will be pleased to make amends at the earliest possible opportunity.

To avoid the issue of disclosure of answer-related information to candidates, all copyright acknowledgements are reproduced online in the Cambridge Assessment International Education Copyright Acknowledgements Booklet. This is produced for each series of examinations and is freely available to download at www.cambridgeinternational.org after the live examination series.

Cambridge Assessment International Education is part of Cambridge Assessment. Cambridge Assessment is the brand name of the University of Cambridge Local Examinations Syndicate (UCLES), which is a department of the University of Cambridge.

© UCLES 2022